Error-Trapping Decoder : errors are confined to n – k consecutive position

<Type I >

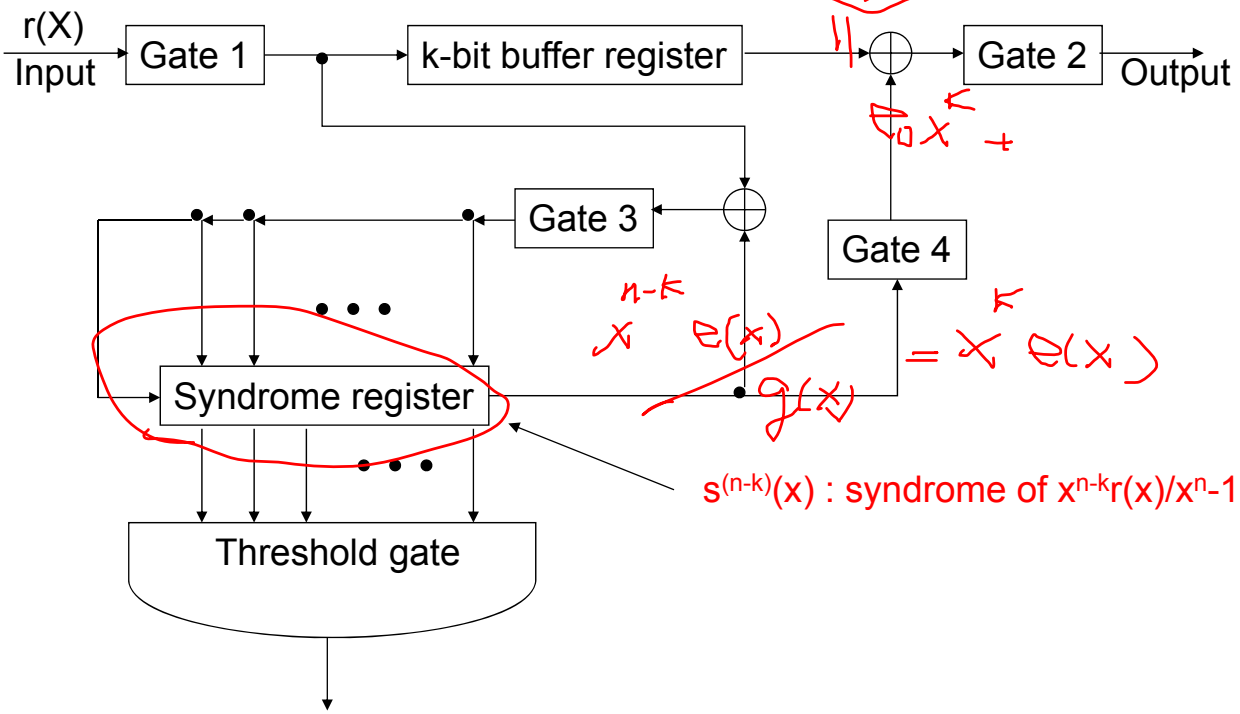

Figure 5.1 Error-trapping decoder.

- Single-error-correcting code
- Some short double-error-correcting code
- Burst-error-correcting code

× long & high rate code with larger error-correcting capability

Q:

(i) $e(x) = e_k x^k + e_{k+1}x^{k+1} + \ldots + e_{n-1}x^{n-1}$

$e^{(n-k)}(x) = e_k + e_{k+1}x + \ldots + e_{n-1}x^{n-k-1}$

$s^{(n-k)}(x) = e^{(n-k)}(x) \Rightarrow x^k s^{(n-k)}(x) = e(x)$

(ii) $e(x) = e_i x^i + e_{i+1}x^{i+1} + \ldots + e_{(n-k)+(i-1)}x^{(n-k)+(i-1)}$

$e^{(n-i)}(x) = e_i + e_{i+1}x + \ldots + e_{(n-k)+(i-1)}x^{n-k-1}$

$s^{(n-i)}(x) = e^{(n-i)}(x) \Rightarrow x^i s^{(n-i)}(x) = e(x)$

i < k

n-i > n-k

$$x^{k-i}s^{(n-k)}(x)/g(x)$$
$$= \left[x^{k-i}x^{n-k}e(x)/g(x)\right]/g(x)$$
$$= x^{n-i}e(x)/g(x) \equiv s^{(n-i)}(x)$$

error trapping !

(1) 當e(x)進入電路後, syndrome register 值為$s^{(n-k)}(x)$

(2) 必須再向右shift k – i 次

Thm : If the number of errors in r(x) is t or less and if they are confined to n – k consecutive positions, the errors are trapped in the syndrome register only when the weight of the syndrome in the register becomes t or less

$\Uparrow$

For a t-error-correcting cyclic code

pf:

(∗) $e(x) = x^jB(x)$, where B(x) has t or fewer terms & $\deg[B(x)] \le n - k - 1$

※ $x^jB(x) = a(x)g(x) + s(x)$

$\because$ $s(x) + x^jB(x)$ is a multiple of g(x) $\therefore$ it's a code polynomial

claim : if $w[s(x)] \le t$ then $s(x) = x^jB(x)$

(i.e. $s(x) + xjB(x) = 0 \Rightarrow \deg[x^jB(x)] \le n - k - 1$)

($w[s(x)] \le t$ & $w[x^jB(x)] \le t$ $\therefore$ $w[s(x)+x^jB(x)] \le 2t$ $\rightarrow\leftarrow$)

(For the end-around case, the same form (∗) would be obtained after certain number of cyclic shifts of the error pattern)

pf: ?

e(X) --- $s(x) \equiv e(x)/g(x)$

$e^{(n-j)}(x)$ --- $s^{(n-j)}(x) \equiv [x^{n-j}e(x)/x^n-1]/g(x) = x^{n-j}e(x)/g(x)$

syndrome register 再向右 shift j 次

e(x) --- $= [x^js^{(n-j)}(x)]/g(x)$

$= [x^j([x^{(n-j)}e(x)]/g(x))]/g(x)$

$= e(x)/g(x) \equiv s(x)$

A(x) = a(x)g(x) + s(x)
if w(s(x)) ≤ t
then s(x) = A(x)
ie. deg[A(x)] ≤ n – k – 1
時才有可能 w(s(x)) ≤ t

※

1. 只有 $x^jB(x) \equiv C(x)$ & $\deg[C(x)] \le n - k - 1$ 時才有可能 s(x) = C(x)
2. 不管是 Type Ⅰ 或 Type Ⅱ decoder, 任何時候 syndrome register 的值永遠是某個 deg ≤ n - 1 多項式 A(x) mod g(x)[where $A(x) = x^ie(x)/x^n-1$, i.e. error pattern不變, 僅差 permutation].

step 1 : gate 1, 3 ON 2, 4 OFF

step 2 : (a) weight (syndrome) ≤ t gate 2, 4 ON 1, 3 OFF ($x^k, x^{k+1}, \ldots, x^{n-1}$)

(b) W (syndrome) > t Go to step 3

step 3 : gate 3 ON cyclically shift the syndrome

shift 1 (a) W (syndrome) ≤ t ($x^{k-1}, x^k, \ldots, x^{n-2}\,\Delta$) 1 digits

shift i (b) W (syndrome) > t ($x^{k-i}, x^{k-i+1}, \ldots, x^{n-i-1}\,\Delta\ldots\Delta$), $2 \le i \le k$. i digits

↑ ($k - i + i = k$)

Note : only k information digits have to been read out !

step 4 : After k-th shift, If W (syndrome) > t

➔(1) $n - k$ consecutive end-around locations

(2) uncorrectable error pattern

step 5 : $k + l$ shifts $1 \le l \le n - k - 1$

At most n-1

$$(\underbrace{x^0, x^1, \ldots, x^{n-k-l-1}}_{n-k-l}, \quad , \underbrace{x^{n-l}, x^{n-l+1}, \ldots, x^{n-1}}_{l})$$

↑ parity locations error ignore

對應至 syndrome register 最左邊 l 個 bits

(1) shift syndrome register $n - k - l$ times (all gates OFF)

(2) correct l errors at the location (gate 2, 4 ON, others OFF)

$x^{n-l}, x^{n-l+1}, \ldots, x^{n-1}$

step 6 : After n-th shift, If W (syndrome) > t Q : suitable for $n - k << k$

➔(1) uncorrectable error pattern

(2) not confined to $n - k$ consecutive positions

<Type Ⅱ>

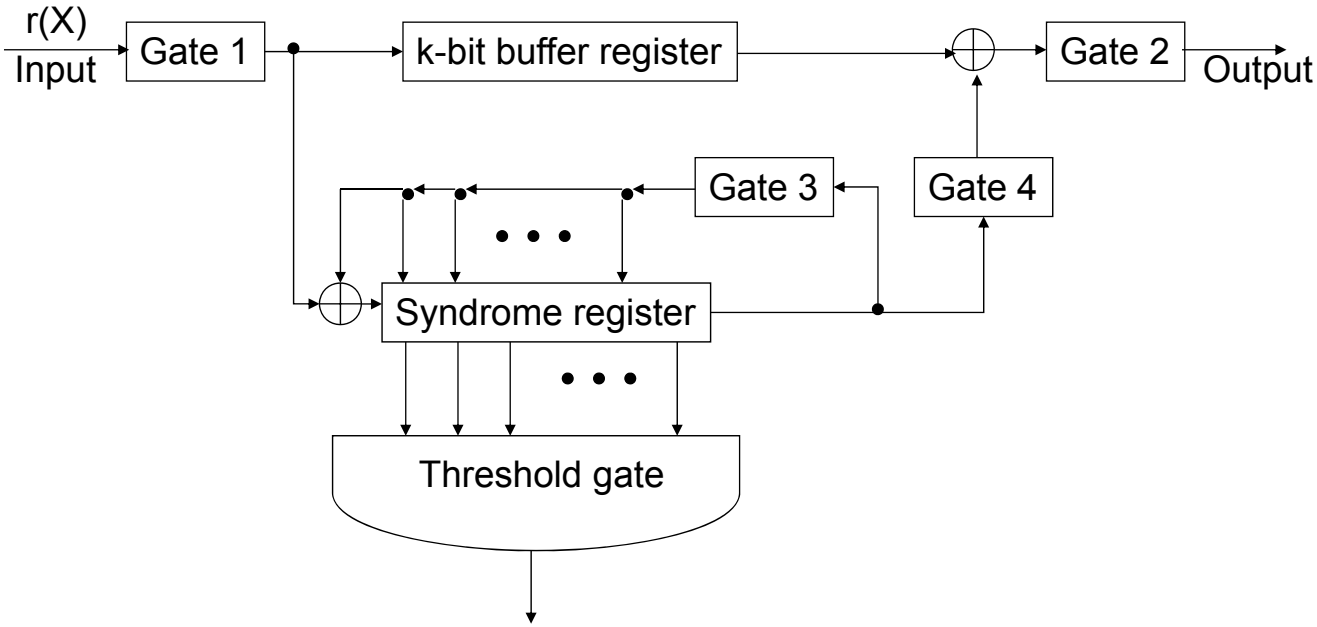

Figure 5.2 Another error-trapping decoder.

(i) $e(x) = e_0 + e_1x + \ldots + e_{n-k-1}x^{n-k-1}$

$s(x) = e(x)$

(ii) $e(x) = e_ix^i + e_{i+1}x^{i+1} + \ldots + e_{(n-k)+i-1}x^{(n-k)+i-1}$

$e^{(n-i)}(x) = e_i + e_{i+1}x + \ldots + e_{(n-k)+i-1}x^{n-k-1}$

$n-k$

$n-k-1$

$n-k-2$

$n-k-l$

l

step 1 : gate 1, 3 ON, others OFF.

step 2 : (a) W (syndrome) ≤ t gate 2 ON, gate 4 OFF $(x^0, x^1, \ldots, x^{n-k-1})$

(b) Cyclically shift the syndrome

step 3 : (a) $(x^0, x^1, \ldots, x^{n-k-2} \quad x^{n-1}) - 1$ shift ←syndrome register

(b) After l-th shifts $2 \le l \le n-k$ 向右 shift $n-k-1$ 次後

$(\underbrace{x^0, x^1, \ldots, x^{n-k-l-1}}_{n-k-l}, \quad , \underbrace{x^{n-l}, x^{n-l+1}, \ldots, x^{n-1}}_{l})$ 更正 right-most bit.

step 4 : ($,\underbrace{\square}_{n-k}\Delta)$ ↑ syndrome register

向右 shift $n-k-l$ 次後

更正最右 l 個 bits

After $n-k+1$ shifts

Step 5: $(\Delta, \square, \Delta \ldots \Delta)$

After $n-k+k-1=n-1$ shifts

Q : suitable for large $n-k$

ie. $n-k >> k$

Example 5.1

Consider the (15, 7) cyclic code generated by $g(X) = 1 + X^4 + X^6 + X^7 + X^8$. This code has minimum distance $d_{min} = 5$, which will be proved in Chapter 6. Hence, the code is capable of correcting any combination of two or fewer errors over a block of 15 digits. Suppose that we decode this code with an error-trapping decoder. Clearly, any single error is confined to $n - k = 8$ consecutive positions. Therefore, any single error can be trapped and corrected. Now consider any double errors over a span of 15 digits. If we arrange the 15 digit positions X^0 to X^{14} as a ring, as shown in Figure 5.3, we see that any double errors are confined to eight consecutive positions. Hence, any double errors can be trapped and corrected. An error-trapping decoder for the (15, 7) generated by $g(X) = 1 + X^4 + X^6 + X^7 + X^8$ is shown in Figure 5.4.

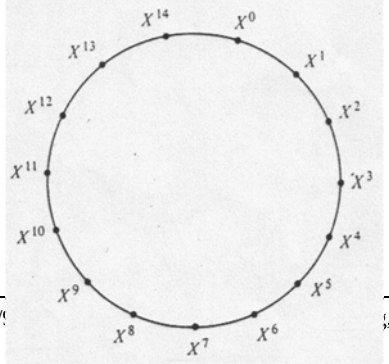

Figure 5.3 Ring arrangement of code digit positions.

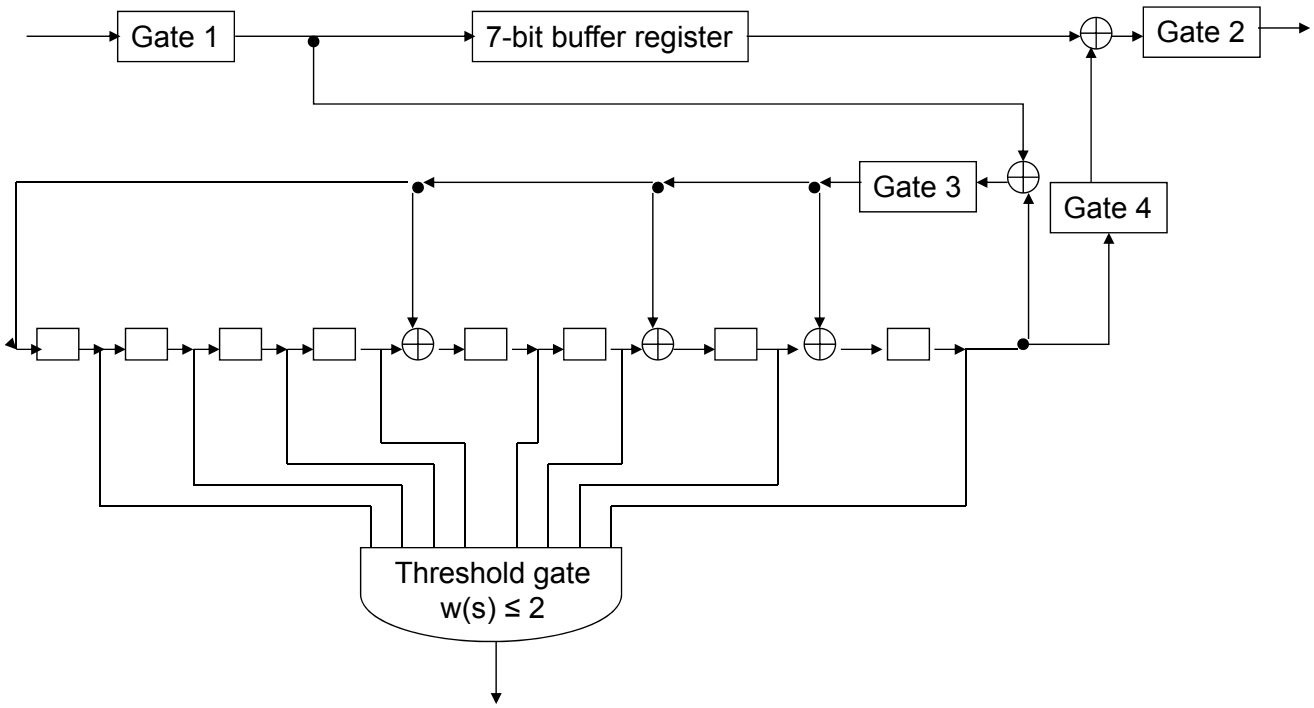

Figure 5.4 Error-trapping decoder for (15, 7) cyclic code generated by $g(x) = 1 + X^4 + X^6 + X^7 + X^8$.

(n ,k) = (15, 7)

$8 = n-k$ k

$i(x) = x^6 + 1$

$g(x) = x^8 + x^7 + x^6 + x^4 + 1$

$c(x) = x^{14} + x^{13} + x^{12} + x^{10} + x^8 + x^7 + x^4 + 1$

or $\underline{x^{14} + x^8} + \underline{x^5 + x^4 + x^3 + 1}$

$e(x) = x^{11} + x$

$v(x) = x^{14} + x^{13} + x^{12} + x^{11} + x^{10} + x^8 + x^7 + x^4 + x + 1$

or $x^{14} + x^{11} + x^8 + x^5 + x^4 + x^3 + x + 1$

110010011011111

x' x''

e = (0 1 0 0 0 0 0 0 0 0 0 1 0 0 0)

A B

n-k = 8
l= 4
K = 7

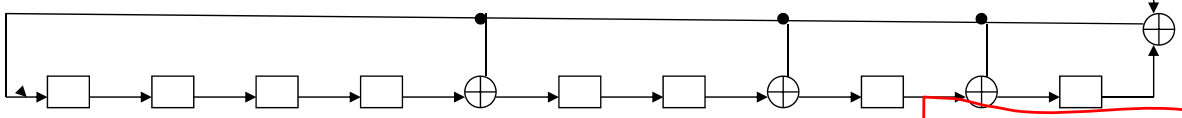

$x^8 \cdot v(x) / g(x) \triangleq s^{(8)}(x)$

$v(x)$ $s(x)$

$v^{(8)}(x)$ $s^{(8)}(x)$

	Shift No.	Syndrome Generator Register		Shift No.	Middle Register	Shift No.	Bottom Register
	0	0 0 0 0 0 0 0 0					
	1	1 0 0 0 1 0 1 1		16	0 1 1 0 0 0 1 1	31	~~0 0 0 0 0 1 0 0~~
	2	0 1 0 0 0 1 0 1		17	1 0 1 1 1 0 1 0	32	~~0 0 0 0 0 0 1 0~~
	3	0 0 1 0 0 0 1 0		18	0 1 0 1 1 1 0 1	33	~~$\boxed{0\ 0\ 0\ 0\ 0\ 0\ 0\ 1}$~~
	4	1 0 0 1 1 0 1 0		19	1 0 1 0 0 1 0 1	34	~~0 0 0 0 0 0 0 0~~
	5	1 1 0 0 0 1 1 0		20	1 1 0 1 1 0 0 1	35	.
	6	0 1 1 0 0 0 1 1		21	1 1 1 0 0 1 1 1	36	.
	7	0 0 1 1 0 0 0 1	$s^{15}(x)$	22	<u>1 1 1 1 1 0 0 0</u>	37	.
	8	0 0 0 1 1 0 0 0		23	0 1 1 1 1 1 0 0	38	All zeros
	9	0 0 0 0 1 1 0 0		24	0 0 1 1 1 1 1 0	39	.
	10	0 0 0 0 0 1 1 0		25	0 0 0 1 1 1 1 1	40	.
	11	1 0 0 0 1 0 0 0	$s^{19}(x)$	26	$\boxed{\text{B}}\boxed{\text{A}}$ <u>1 0 0 0 0 1 0 0</u>	41	.
	12	0 1 0 0 0 1 0 0		27	~~0 1 0 0 0 0 1 0~~	42	.
	13	0 0 1 0 0 0 1 0		28	~~$\boxed{0\ 0\ 1\ 0\ 0\ 0\ 0\ 1}$~~	43	.
	14	1 0 0 1 1 0 1 0		29	~~0 0 0 1 0 0 0 0~~	44	.
$s^8(x)$	15	<u>1 1 0 0 0 1 1 0</u>		30	~~0 0 0 0 1 0 0 0~~	45	.

只需更正 B 部分
A 為 parity check bits

$k + l = 11$ shifts
$e(x) = x + x^{11}$
$e^8(x) = x^4 + x^9$
$e^{19}(x) = 1 + x^5$
$s(x) = s^{15}(x)$

Note : Errors trapped at the 27th shift

Figure 6.26 Error-trapping example (15, 7) BCH code.